Bench-mounted fume hood with side installation

Secuflow bench-mounted fume hood with side installation for work performed while seated

Intended use

- Protective device for the user, tested in acc. with EN 14175
- Extraction of fumes, aerosols and dust from the internal workspace to prevent dangerous amounts of pollutants from escaping into the laboratory
- Reduced risk of the formation of a high concentration of hazardous substances / hazardous explosive atmosphere in the internal workspace
- Protection from splashes of hazardous substances
- Protection from flying particles, bodies or parts escaping from the internal workspace
- General fume hoods constructed in acc. with EN 14175 are normally not suited for use with radioactive substances or microorganisms
- Not suitable for openly breaking down chemicals
- Suitable for work performed while seated
- Active supportive flow technology (Secuflow technology) reduces the energy consumption while regulations and standards are observed
- Service outlets in the service modules of the side panels of the internal workspace
- Control units located vertically on the side service panels

Design

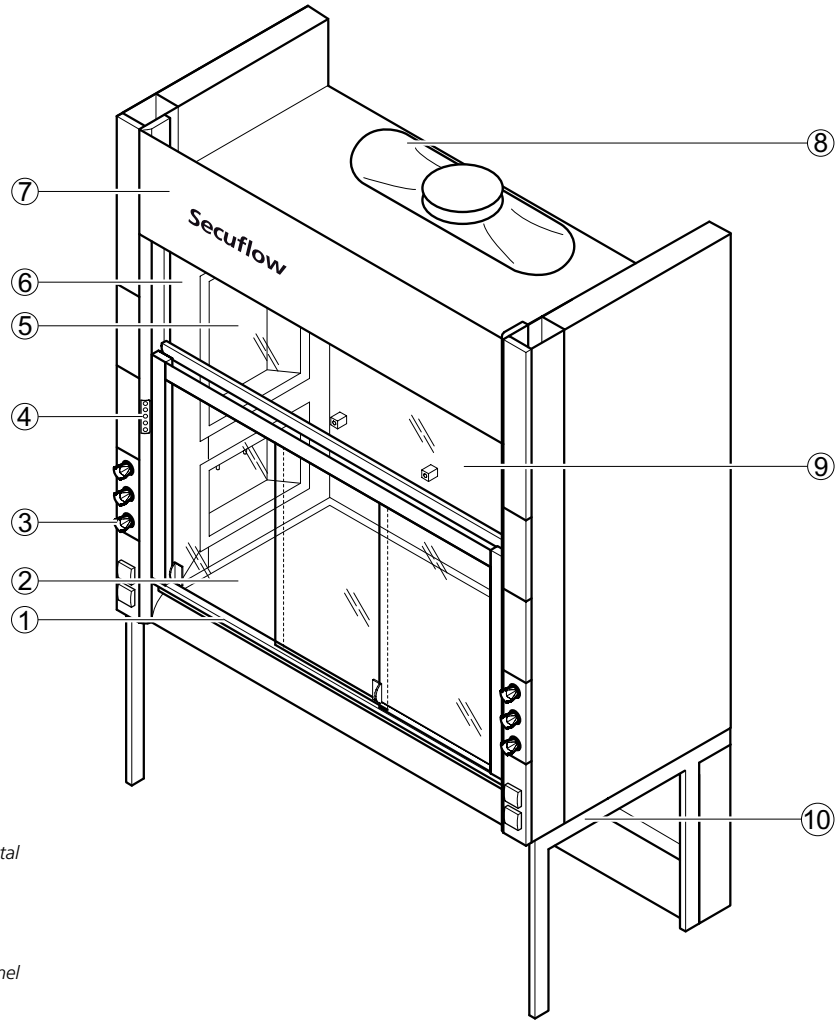

1 *Sash with handle and horizontal sashes*
2 *Worktop*
3 *Service panel*
4 *FAZ or AC control panel*
5 *Service module in the side panel of the fume hood*
6 *Upper sash window*
7 *Removable fascia panel*
8 *Exhaust hood*
9 *Baffle with scaffold points*
10 *Bench frame with push-in underbench units as an option*

Bench-mounted fume hood with side installation
Secuflow bench-mounted fume hood with side installation for work performed while seated

Dimensional drawing

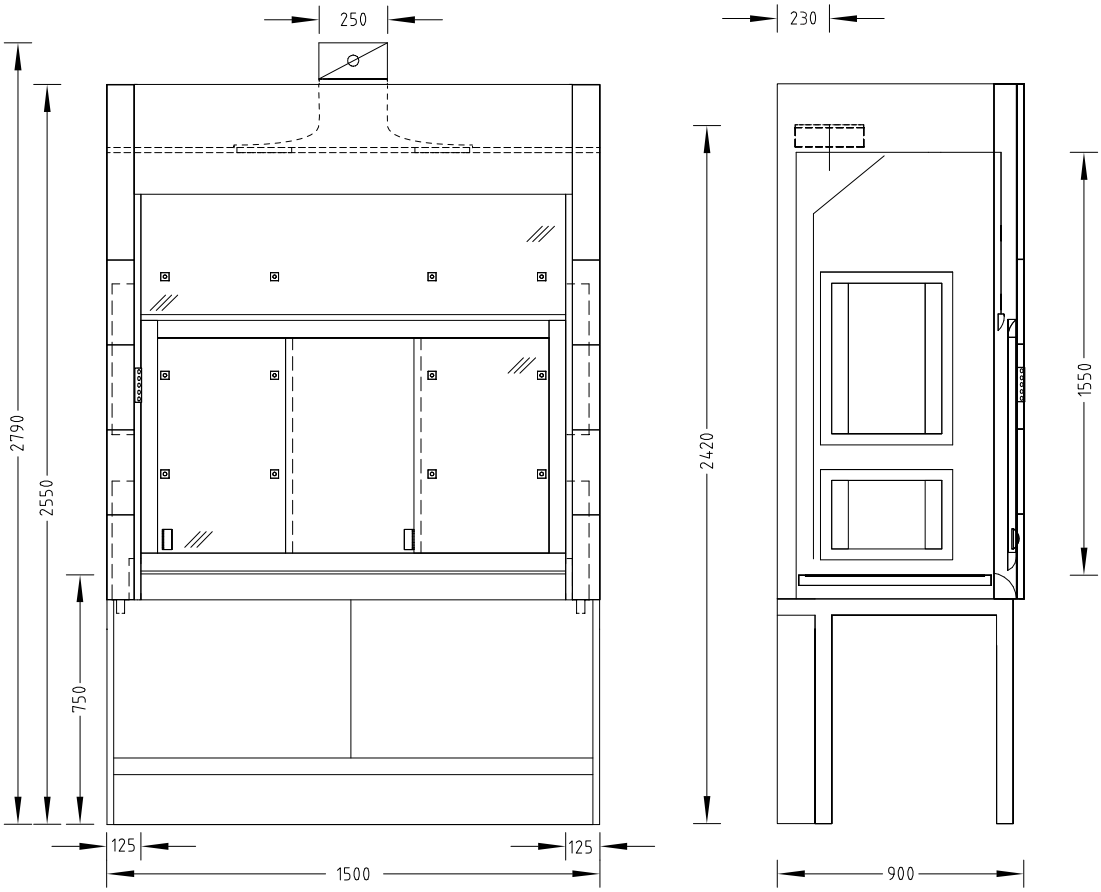

Technical data

Dimensions	
Width [mm]	1500
Depth [mm]	900
Height [mm]	2550
Clear width, internal workspace [mm]	1250
Clear height, internal workspace [mm]	1550
Working height [mm]	750

Weight	
Without installation [kg]	Approx. 390

Bench-mounted fume hood with side installation
Secuflow bench-mounted fume hood with side installation for work performed while seated

Design characteristics	
Supporting construction	H-frame
Sash	2 horizontal sashes
Side panel of the fume hood	Glass pane on the left and/or right as an option; not if service modules are installed in the side panel of the fume hood Material lock on the left and/or right as an option
Max. number of devices for scaffold points, ø 12 to 13 mm	12
Max. load per scaffold point with scaffold rod length 300 mm [kg]	5
Service modules	Service modules in the left and/or right side panel of the fume hood, depending on requirement

Electrics	
Electrical supply	External sockets in service panels Internal sockets in service modules
Fuse box	Optional
Sash controller SC	Optional

Sanitary technology	
Sanitary supply	Service modules with take-off valves for vacuum, gases and/or waters and integrated sink (PP) as an option

Ventilation technology	
Minimum air exchange rate [m³/h] [1]	410
Function display	FAZ
Airflow damper, constant	Airflow-Controller AC
Airflow damper, variable	Airflow-Controller AC
Detector of sash position	Only variable with Airflow-Controller AC
Connection height [mm] for FAZ with extract air hood Ø 250 mm	2420
Connection height [mm] for FAZ with extract air hood Ø 315 mm [2]	2420
Connection height [mm] for AC with extract air hood Ø 250 mm	2790
Connection height [mm] for AC with extract air hood Ø 315 mm [2]	2760
Underbench exhaust	As an option, depending on requirements and regulations

[1] All air volume specifications refer to an opening height of the sash window of 500 mm (test opening in acc. with EN 14175) and the maximum tracer gas values recommended by German Standard (BG Chemie). Shown rates correspond to a face velocity of 0.15 m/s. For other design face velocities, please contact your Waldner sales representative.

[2] In order to minimise noise and pressure losses, for air volumes >1000 m³/h Waldner recommends using the extract air hood with a connection diameter of 315 mm.

A maximum admission pressure of 600 Pa should not be exceeded in the case of fume hoods with airflow dampers.
The indicated minimum air exchange rates were determined under specified test conditions in acc. with EN 14175-3. These minimum air exchange rates must be adapted when dimensioning the ventilation system.
If on-site extract air monitoring systems or airflow dampers are used, the required air volumes may be different. The operating limitations must be agreed upon with Waldner.

Material/surface	
Worktop	Stoneware Polypropylene Epoxy Stainless steel
Internal lining	Solid grade laminate Melamine resin facing